GAW SERIES

INSTALLATION & OPERATING INSTRUCTIONS
VERTICAL WALL MOUNT AIR HANDLER
(ELECTRIC HEAT)

MODEL
(INCLUDING HEATER MODEL #) _____

SERIAL #_____

INSTALLER _____

INSTALLATION DATE _____

These instructions should be retained and kept adjacent to the unit for future use

373 Atascocita Rd.
Humble, TX 77396
Phone 800.423.9007
Fax 281.441.6510
www.airmark-ac.com

IO-123084-GAW-101718
©2018 AirMark

Safety Instruction

Potential safety hazards are alerted using △ symbol. The symbol is used in conjunction with terms that indicate the intensity of the hazard.

△WARNING This symbol indicates a potentially hazardous situation which if not avoided, **could** result in serious injury, property damage, product damage or death.

△CAUTION This symbol indicates a potentially hazardous situation which if not avoided, **may** result in moderate injury or property damage.

△WARNING **Certified technicians or those individuals meeting the requirements specified by NATE may use this information. Property and product damage or personal injury hazard may occur without such background.**

△WARNING **All** power sources should be disconnected prior to servicing. Failure to do so may cause personal injury or property damage.

△WARNING Product designed and manufactured to permit installation in accordance with local and national building codes. It is the installer's responsibility to ensure that product is installed in strict compliance with national and local codes. Manufacturer takes no responsibility for damage (personal, product or property) caused due to installations violating regulations. In absence of local/state codes, refer to **National Electric Code: NFPA 90A & 90B Uniform Mechanical Code.**

△WARNING When this unit is installed in an enclosed area, such as a garage or utility room with any Carbon Monoxide producing devices (i.e. automobile, space heater, water heater etc.) ensure that the enclosed area is properly ventilated.

△CAUTION Only factory authorized kits and accessories should be used when installing or modifying this unit unless it is so noted in these instructions. Some localities may require licensed installer/service personnel.

△WARNING Unit is not approved for outdoor installations.

△WARNING The unit is designed for operation with 208/240 V, single phase, 60 Hz power supply. Airmark will not be responsible for damages caused due to modification of the unit to operate with alternative power sources.

Inspection

On receiving the product, visually inspect it for any major shipping related damages. Shipping damages are the carrier's responsibility. Inspect the product labels to verify that the model number and options are in accordance with your order. Manufacturer will not accept damage claims for incorrectly shipped product.

Installation Preparation

Read all the instructions in this guideline carefully while paying special attention to the WARNING and CAUTION alerts. If any of the instructions are unclear; clarify with certified technicians. Gather all the tools needed for successful installation of the unit prior to beginning the installation.

This unit is designed for zero clearance installation on three sides and adequate clearance to provide access for service in the front. A min of 2.5 – 3.5 feet clearance is recommended on the front end.

These units are designed to be installed on top of a water heater or recessed into a wall. The unit should be installed in Vertical Upflow position **ONLY**. While installing the unit into a recessed wall, attach unit to $2'' \times 4''$ framing stud along the front flange. These air handlers are provided with an offset hanging bracket at the rear for certain wall mount applications.

The drain lines must be installed with ¼" per foot pitch to provide free drainage. A condensate trap **MUST** be installed on the primary drain line to ensure proper drainage of the condensate. The trap must be installed in the drain line below the bottom of the drain pan. Figure 1 illustrates the typical drain trap installation.

These units are equipped with a bottom primary and secondary drain and a single side primary OR secondary. When utilizing the unit, disable switch on the secondary line. It must be located on the side connection to avoid a false shutdown created by condensate droplets falling into the bottom secondary connection. The switch should be adjusted to permit normal operation of the unit and disable the unit in the event of a clogged primary before the condensate spills over the pan. In lieu of this a hood may be field fabricated to slide over

©2018 AirMark

the secondary to keep droplets out but allow trapped condensate into secondary fittings.

⚠CAUTION Since coil is upstream of the blower; all drains **MUST** be trapped or sealed. Failure to do so will result in condensate overflow from the drain pan. Airmark will **NOT** be responsible for any damages resulting from failure to follow these instructions.

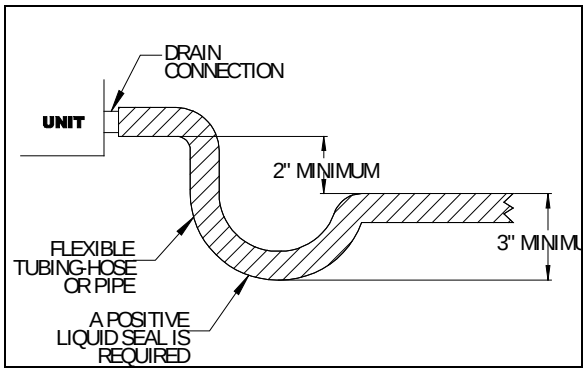

Fig.1. Typical drain line trap set up

Ductwork

Duct systems should be installed in accordance with standards for air-conditioning systems, National Fire Protection Association Pamphlet No. 90A or 90B. They should be sized in accordance with National Environmental System Contractors Association Manual K, or whichever is applicable.

On any job, non-flammable flexible collars should be used for the return air and discharge connections to prevent transmission of vibration. Although these units have been specially designed for quiet vibration-free operation, air ducts can act as soundboards can, if poorly installed, amplify the slightest vibration to the annoyance level.

All main supply and return air drops should be properly sized as determined by the designer of the duct system and should not necessarily be the size of the duct flange openings of the unit.

These models have a bottom or front return. Discard the drain access panel in the bottom of the unit if this is a bottom return application. In case of a front return application, the front access panel should be removed and discarded. If an accessory grill as shown in Fig 2. is being used; the front access panel should be removed and discarded.

A filter rack is provided for 1"x14x18" (GAW19/20/25/26) or 1"x20"x20" (GAW18/24/30/36/31/37) nominal size filter. Inspect and clean or replace fliter every month. A blocked filter can reduce air flow to the coil and hinder the performance of the system.

It is recommended that wherever supply and return air sheet metal duct pass through unconditioned areas, they be insulated to prevent excessive heat loss during heating operation. When applied in conjunction with summer air conditioning, sheet metal duct routed through unconditioned areas should be insulated and have an outside vapor barrier to prevent formation of condensation.

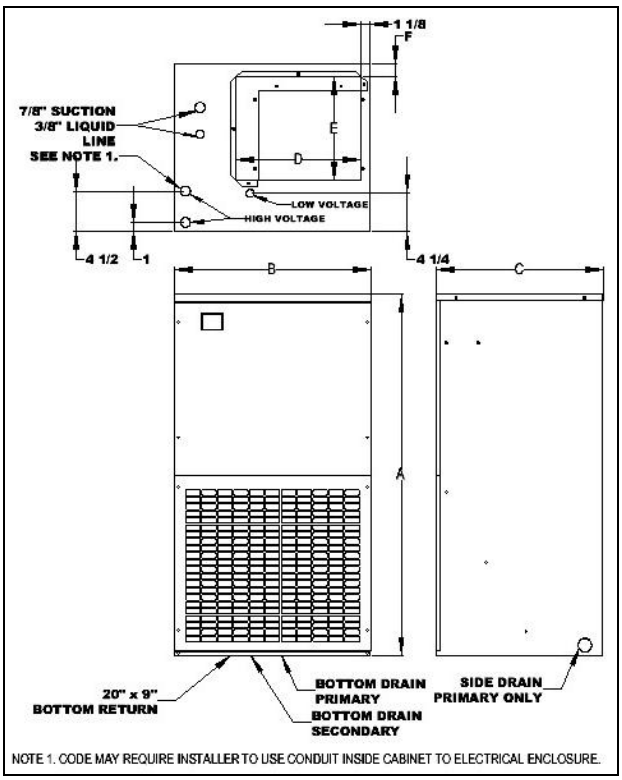

Fig.2. GAW air handler grill and drain connections

Installation

⚠CAUTION Ensure that the unit is adequately sized. The tonnage of the outdoor unit should never exceed the tonnage of this unit.

⚠WARNING The coil was manufactured with dry nitrogen pre-charge. Release the pressure through the Schrader valve test port prior to

©2018 AirMark

installation. If holding pressure is not present, return coil to distributor for exchange.

Clean coil fins with degreasing agent or mild detergent and rinse fins clean prior to installation.

All connection joints should be burr-free and clean. Not removing burrs and cleaning may increase chances of a leak. It is recommended to use a pipe cutter to remove the spun closed end of the suction line.

To avoid damage to grommets (where present), remove these prior to brazing by sliding over the lines. Use a quenching cloth or allow the lines to cool before reinstalling the grommets.

⚠CAUTION Some Airmark coils may include a Schrader valve on the suction manifold. Ensure that the Schrader valve and valve core (where present) are protected from heat during brazing and installation to prevent leakage.

Metering Device

Airmark coils are available with two kinds of metering devices a) flowrator or b) TXV. Instructions below are separated in sections according to the metering device. Ensure that the applicable section is thoroughly read and understood.

Flowrator Coils:

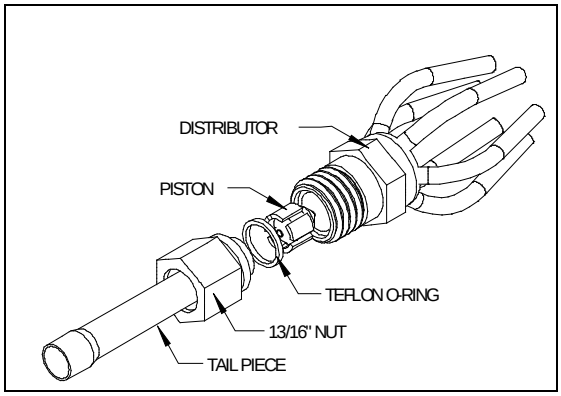

Fig.3. Flowrator assy components

⚠CAUTION Use Piston sizes recommended by the outdoor unit manufacturer whenever possible. The piston should be sized according to the capacity of the outdoor unit.

⚠WARNING Failure to install the proper piston can lead to poor system performance and possible compressor damage.

During some installations a piston change may be required. If so the installer **MUST** change the piston. As stated earlier, use piston sizes recommended by the outdoor unit manufacturer. If a sizing chart is not available, use Table 1 below to size the required piston. The size of the piston is stamped on the piston body.

Outdoor Capacity	Orifice Size–R22	Orifice Size-R410A
12,000	0.041	N/A
18,000	0.055	0.049
24,000	0.059	0.055
30,000	0.068	0.059
36,000	0.074	0.068
42,000	0.080	0.074
48,000	0.084	0.080
60,000	0.092	0.089

Table.1. Piston Size Chart

Instruction for piston change

1) Turn the 13/16 nut once to release any residual pressure in the coil.

2) After ensuring that the coil is free of any residual pressure, disassemble the flowrator body completely using two wrenches. Distortion of the feeder tubes SHOULD be avoided.

3) The wrench used to clasp the nut should be turned in a counter-clockwise direction to unscrew the nut.

4) Slide the 13/16 nut over the line set and separate the two halves of the flowrator.

⚠CAUTION Pay close attention to the Teflon O-ring. Be sure to replace the O-ring to attain a proper seal. (The Teflon O-ring is located between the two halves of the flowrator)

5) Pull the piston out using a small wire or pick. Verify the piston size (size is typically stamped on the body of the piston). If a different piston size is required by the outdoor unit manufacturer replace the piston using the small wire provided with the piston kit.

©2018 AirMark

⚠CAUTION Pay close attention to the piston orientation. The pointed end of the piston **MUST** go into the distributor body/towards the coil. Failure to ensure this orientation will cause the piston to be bypassed during operation which might damage the outdoor unit.

6) Assemble the two halves correctly and ensure that the white Teflon O-ring is present between the two halves.

7) Slide the 13/16 nut onto the distributor body.

8) Tighten the nut to a torque of approximately 10-30 ft-lbs. Do **NOT** over tighten the nut. This will hamper the piston movement during operation.

9) Slide the grommet back to position to prevent air leakage.

TXV Coils:

⚠WARNING The sensing bulb and TXV body **MUST** be protected from overheating during brazing. The sensing bulb and TXV body must be covered using a quench cloth or wet cloth when brazing. Pointing the brazing flame away from the valve and sensing bulb provide partial protection only.

⚠CAUTION Ensure that the TXV selected is compatible with the refrigerant used in the outdoor system (R22 or R410A). TXV caps are painted green for R22 or pink for R410A. In absence of color, the caps will be marked with the compatible refrigerant.

⚠CAUTION The valves should be sized according to the capacity of the outdoor unit. Failure to install the right valve can lead to poor performance and possible compressor damage.

TXV Bulb Mounting

The orientation and location of the TXV bulb has a major influence on the system performance.

⚠CAUTION Ensure that the TXV bulb is in direct contact with the suction/vapor line. Gaps between the bulb and tube should be avoided. Failure to eliminate gaps will impair the proper functioning of the TXV valve.

It is recommended that the TXV bulb be installed parallel to the ground (in a horizontal plane). The bulb position should be above and between 4 o'clock and 8 o'clock. Fig. 4 shows the recommended position for the TXV bulb installation in the horizontal plane.

The TXV sensing bulb **SHOULD** be mounted using the metal clamp provided. In order to obtain a good temperature reading and correct superheat control, the TXV sensing bulb must conform to ALL of the following criteria:

1) The sensing bulb **MUST** be in direct and continuous contact with the suction line

2) The sensing bulb should be mounted horizontally on the suction line.

3) The sensing bulb must be mounted above and between the 4 and 8 o'clock position on the circumference of the suction line.

4) The sensing bulb **MUST** be insulated from outside air.

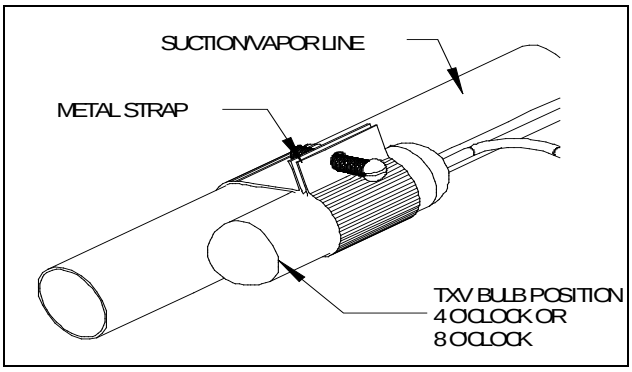

Fig.4. Recommended location of the TXV bulb in a horizontal orientation

The mounting location and insulation guards the sensing bulb from false reading due to hot outside air or liquid refrigerant formed inside the suction/vapor line.

As recommended earlier, the TXV sensing bulb should be mounted in a horizontal plane in relation

©2018 AirMark

to the suction/vapor line. However, in case such a mounting is not feasible and the sensing bulb has to be mounted vertically; then place the bulb as shown in Fig.5.

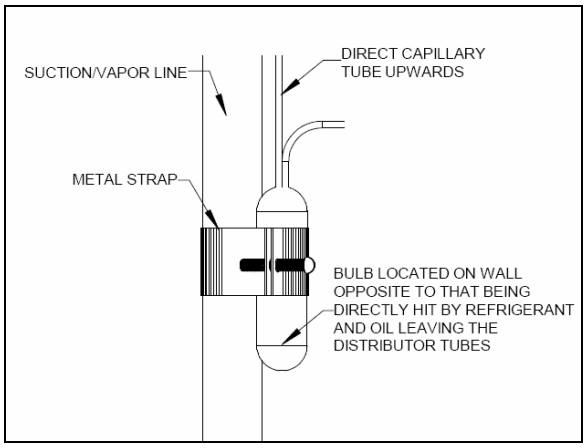

Fig.5. Figure showing the sensing bulb mounted in a vertical orientation

⚠CAUTION If the TXV sensing bulb is mounted vertically; the capillary **MUST** be directed upwards. The bulb must be mounted on the wall opposite to that being directly hit by the refrigerant and oil leaving the distributor tubes.

Field – Installed Expansion Valve Coils

Remove the valve identification sticker from the valve and place it adjacent to the Airmark model number on unit name plate.

When installing an expansion valve, it is not necessary to remove all the access panels and slide the coil out of the housing.

1) Disassemble the flowrator body using two wrenches. Unscrew the body with a counter-clockwise motion.

2) Replace the white Teflon seal in place (located between the halves).

3) Remove the existing flowrator piston using a small wire or pick.

4) Inspect the TXV box to confirm that the valve is compatible with the refrigerant in the system.

5) Remove the valve from the box and note the location of the inlet side (threaded male port) and the outlet side (female swivel nut port).

6) After ensuring that the white Teflon seal is still in place inside the flowrator body, screw the female swivel nut onto the flowrator body.

7) Place the attachment nut on the liquid line.

8) Braze the stub-out portion to the liquid line and let cool.

⚠WARNING Do not attempt to touch the braze joint while hot. Touching it may cause sever burns.

9) Remove the additional white Teflon seal ring from the box and place on the shoulder just inside the inlet port. Screw the nut attached to the stub-out portion of the flowrator body onto the inlet port of the TXV.

10) Tighten all connections taking care to use proper back up.

Some Airmark coils come with a Schrader valve on the suction line. If a Schrader port is present

11) Remove valve stem from the Schrader port mounted on the suction line

12) Screw flare nut on TXV equalization tube in to the Schrader valve stem

Coils without Schrader Ports

13) Locate a convenient spot on the suction line and punch a ¼" hole with a pick or other suitable tool.

⚠CAUTION Do **NOT** drill a hole as chips will enter suction manifold.

14) Insert TXV equalizer tube approximately 3/8" into the hole and apply solder to seal.

©2018 AirMark

Fig. 6. Shows the components of a typical TXV assembly

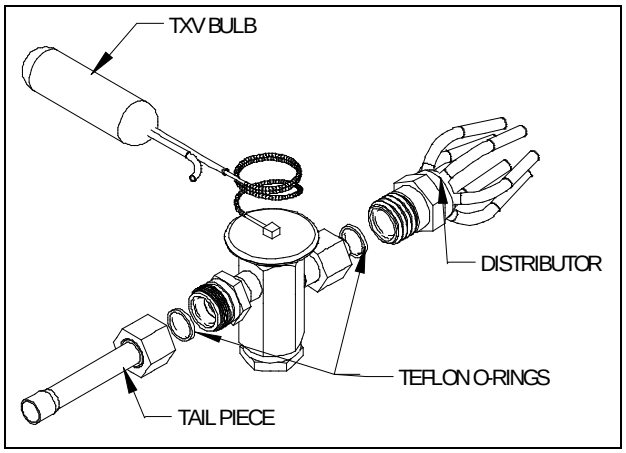

Fig.6. Components of a typical TXV assembly

⚠CAUTION Using a non-bleed expansion valve may require the use of a hard-start kit. Follow the outdoor unit manufacturer's guidelines.

Electrical Installation

These units are designed for single or three phase 208/240 volts, 60 Hz power supply. Wire selection and wiring must be in accordance with the National Electric Code and/or local codes. Unit terminals are designed to accommodate copper and aluminum wirings. If aluminum wiring is used; please observe special precautions relative to sizing, wire connections and corrosion protection.

All models with 5, 8 or 10 kW electric heat are arranged for single circuit connections. Models larger than 10 kW are arranged for multi-circuit protection. Fig. 7 shows the typical electrical connections required for the air handler unit.

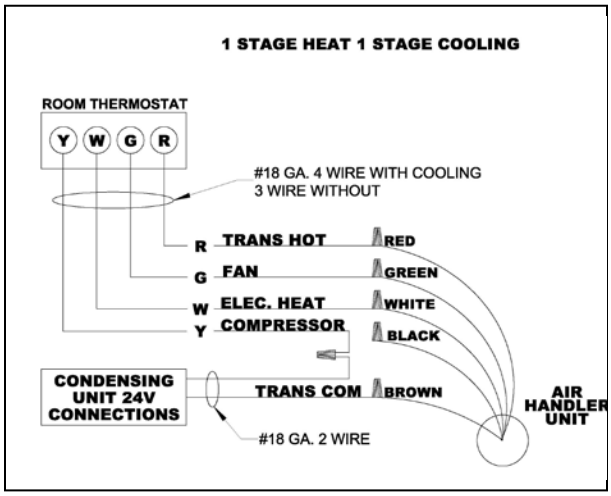

Fig.7. Typical electrical connections required

System Charging

⚠CAUTION An improperly charged system may cause degradation in system performance and damage the compressor.

After installing the coil, refer to the outdoor unit manufacturer's instructions for charging techniques and amount of charge. If outdoor unit manufacturers charging instructions are unavailable; then refer to instructions below to charge the system.

1) Bring airflow up to the maximum CFM possible according to Table 2 below.

2) Flowrator coils – Add refrigerant until the superheat measured at the outdoor unit suction/vapor line matches the superheat listed in Table 2.

Expansion valve coils – Add refrigerant until the subcooling measured at the outdoor unit liquid line matches the subcooling recommendation of the outdoor manufacturer (typically 7º – 10º F). If chart is unavailable, charge unit to a subcooling value of 8ºF +/- 1ºF."

©2018 AirMark

Outdoor Temp °F D.B.	Superheat °F		
	Min	Nom	Max
65	35	40	45
70	31	35	39
75	26	30	34
80	22	25	28
85	17	20	23
90	13	15	17
95	8	10	12
100	4	5	6

Table.2. Superheat chart

Start up

After all connections are made, start-up and check-up of the unit must be performed before proper evaluation of the entire system can be made. Make sure that heat anticipator is properly set as noted on thermostat instructions.

Load requirements can vary in each residence and it may be necessary for the installer or homeowner to make slight adjustments to the heat anticipator setting for longer or shorter cycles. It is recommended to change the setting no more than plus or minus 0.05 amps at a time. Greater changes can cause the unit to rapid cycle or remain on excessively. To properly check the unit's operation, the installer should have an electrical current measuring device (0-10 amp Amprobe, Fluke), air pressure measuring device (0-1.0 in slope gauge), and a temperature-measuring device (0-200ºF thermometer).

Install the Amprobe to measure blower current, the slope gauge to measure static air pressure at the units and the temperature device to measure unit supply and return air temperature. Before taking measurements, be sure that all registers, grilles and dampers are open or are set to their proper positions. Be sure that clean filters are in place. Temperature measuring device must be installed to obtain average temperature at both inlet and outlet. For outlet, measure temperature of each main trunk at a location far enough away to avoid heater radiation and read the average temperatures. Table 3 below shows the CFM that should be achieved at various external static pressures

UNIT MODEL	SPEED TAP	CFM VS. STATIC PRESSURE				
		0.1	0.2	0.3	0.4	0.5
GAW18/24	LOW	834	795	746	687	620
	HIGH	930	888	823	749	680
GAW19/25	LOW	740	710	685	650	615
	HIGH	930	880	830	770	710
GAW 20/26	LOW	727	696	674	640	604
	HIGH	909	866	814	757	696
GAW 30/36	LOW	1123	1094	1062	1034	1000
	HIGH	1396	1358	1313	1261	1200
GAW 31/37	LOW	1154	1100	1042	982	901
	HIGH	1256	1193	1113	1057	982

Table 3. CFM delivered at various external statics

Electrical Heat Controls:

- Turn on power supply. Set thermostat fan switch to on. Set the cooling indicator to maximum, heating to minimum. System switch may be on heat or cool. Check slope gauge measurement against appropriate air flow chart. Make damper, register and motor speed adjustments to obtain required airflow.
- Set thermostat fan switch to auto, system to heat and thermostat heating indicator to maximum heat. Blower should start and all heat be energized.
- Check air flow using temperature rise method.

$$CFM = \frac{OUTPUT\ (BTUH)}{1.08 \times TEMP\ RISE}$$

NOTE: BTUH output should be computed by VOLT x AMPS x 3.4 = BTUH OUTPUT. Since line volt can vary, do not use nameplate rating to determine output.

OPERATION AND MAINTENANCE

Below are brief descriptions of the key components of the unit and installation. This manual only provides general idea of the components and recommended practices. The installer should use best judgment to ensure safe installation and operation of the unit.

1) Room Thermostat- This is the device that controls that operation of your heating and/or cooling unit. It senses the indoor temperature

©2018 AirMark

and signals the equipment to start or stop maintaining the temperature you have selected for your comfort. The room thermostat should be in a central, draft free inside wall location for best operation. Do not place any heat producing apparatus such as lights, radio, etc., near the thermostat as this will cause erratic operation of the comfort system. The thermostat can accumulate dust or lint which can affect its accuracy. It should be cleaned annually.

2) Air Filter(s) - All central air moving comfort systems must include air filter(s). These filters will be located either in the equipment or in the return air duct system upstream of the equipment. The filter(s) removes dust and debris from the air thus helping to keep your air-conditioned space clean. More important, the filter keeps dust and debris from collecting on the heat transfer surfaces thus maintaining optimum equipment efficiency and performance. Inspect and clean or replace filters every month. This routine maintenance procedure will pay big dividends in reduced operating cost and reduced service expense. Never operate comfort equipment without filter(s).

3) Fuses and/or Circuit Breakers- This comfort equipment should be connected to the building electric service in accordance with local and National Electric codes. This electrical connection will include over-current protection in the form of circuit breakers. Have your contractor identify the circuits and the location of over-current protection so that you will be in a position to make inspections or replacements in the event the equipment fails to operate

4) ⚠WARNING

a) Do not store combustible materials or use gasoline or other flammable liquids or vapors in the vicinity of this appliance.

b) Do not operate the comfort equipment with panels removed.

c) Have your contractor point out and identify the various cut-off devices, switches, etc., that serve your comfort equipment. There is a main switch that will cut off energy to your heating system. Know where they are so that you may cut off the flow of energy in the event of overheating.

5) Periodic Checkup and Service- This product is designed to provide many years of dependable, trouble-free comfort when properly maintained. Proper maintenance will consist of annual check-ups and cleaning of the internal electrical and heat transfer components by a qualified service technician. Failure to provide periodic checkup and cleaning can result in excessive operating cost and/or equipment malfunction.

6) Lubrication- Direct drive blower motors are equipped with permanently lubricated bearings and do not require further lubrication.

7) Air filter replacement: An air filter can restrict the airflow of air to the fan coil if it is not cleaned or replaced periodically. When replacing the air filter, always replace with the same type and size as originally furnished with the unit.

©2018 AirMark

Wiring diagram for GAW models

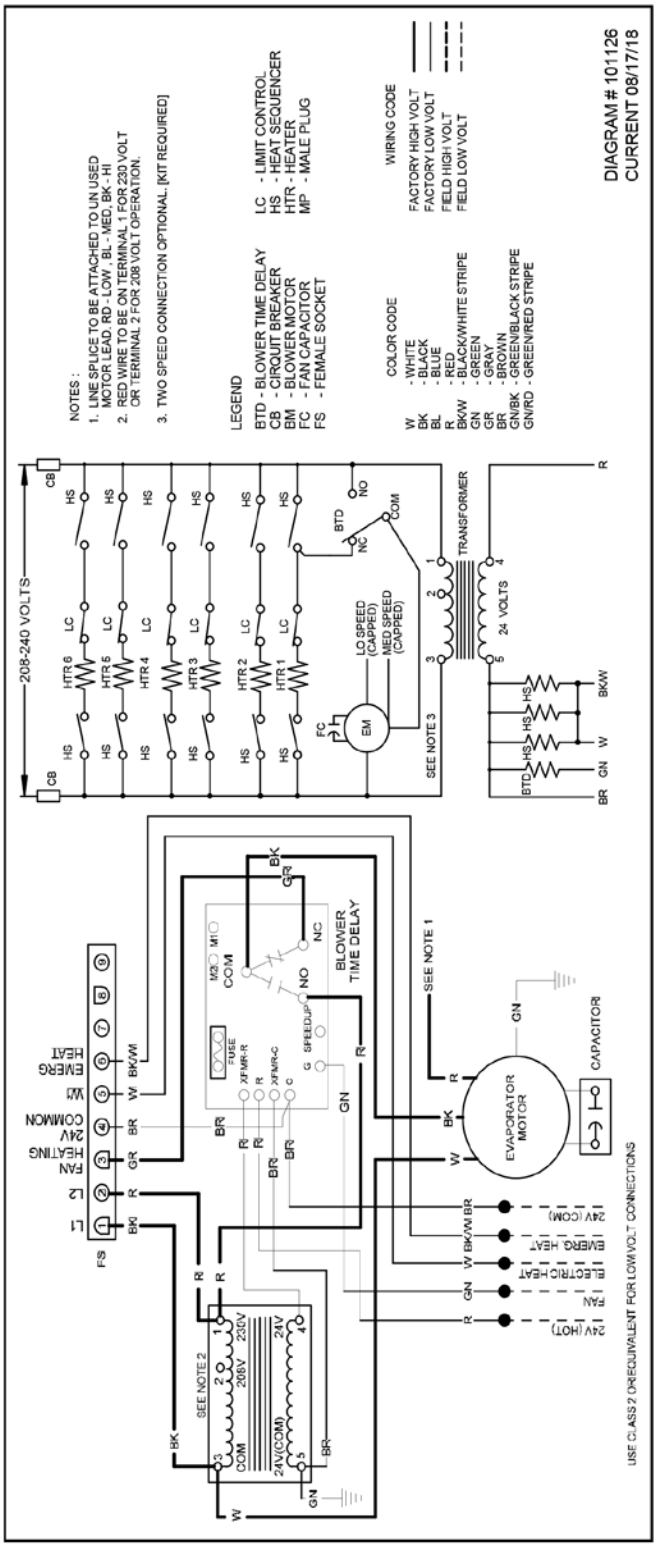

WARNING **HIGH VOLTAGE** disconnect all power sources prior to servicing. Failure might lead to safety hazard

©2018 AirMark